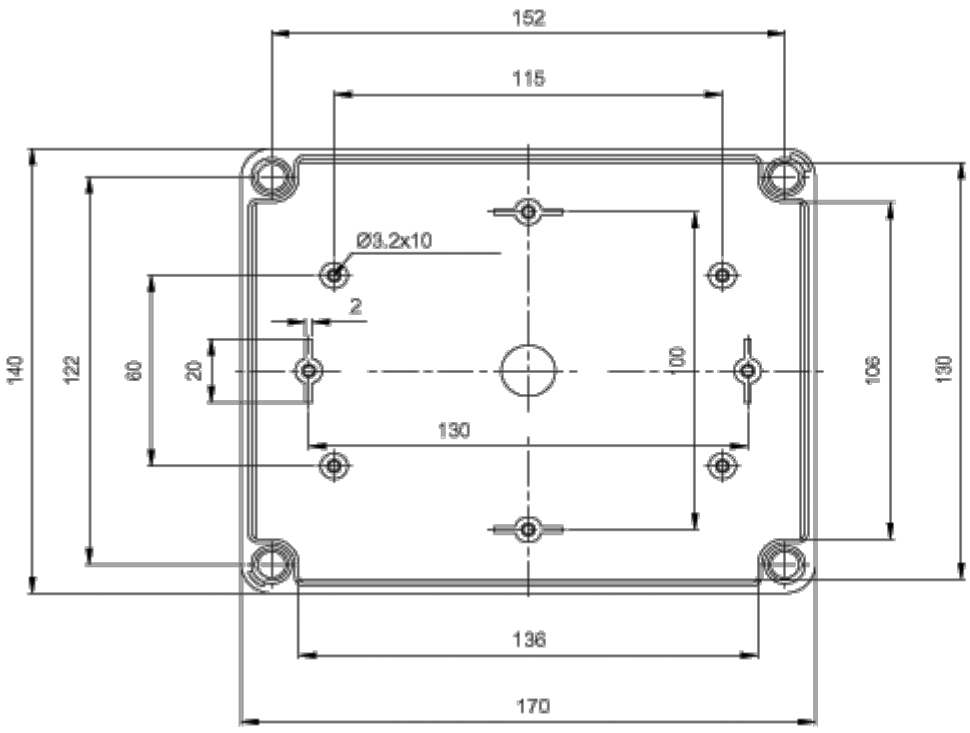
152
115
Ø3.2x10
2
140
122
80
20
100
106
130
130
136
170

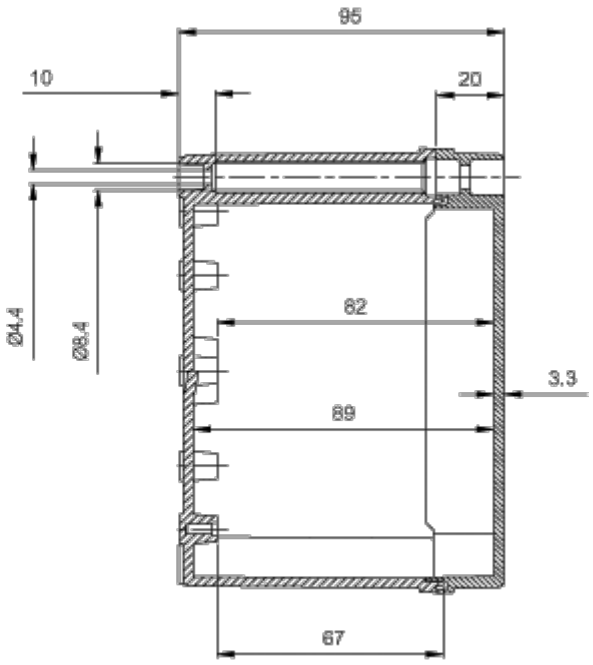
95
10
20
Ø4.4
Ø8.4
62
3.3
89
67